Intl J Engg Sci Adv Research 2015 Sep;1(3):198-200

A Brief Study of Facial Expression Recognition System

Shubhanshi Pandey
Computer Science and Engineering Department
Rama University,Kanpur, India

***Abstract*— Facial expression plays an important role in human face to face communication. it may also be used in behavioral science and in clinical practice. There are many approach have been proposed for automatic facial expression recognition.Altough humans can recognize the expression very easily but can a machine recognize the expression is a challenge. This paper presents an overview of automatically expression recognition system.**

I. INTRODUCTION

Human facial expression can be recognizing by machine via mathematical algorithm. Facial expression recognize by a machine is important in many fields like medical science a doctor can be alerted when a patient in severe pain an crucial action can be taken immediately.

Gestures and expressions of human body can be read by any sensing input device like web cam, which connect to the computer for further processing on image by algorithm of statistical analysis or based on artificially intelligence.

II. PROPOSED METHODOLOGY

The methodology is that we will select that part of face which show or drive the expression, unnecessary part can be crop like the area of hair and the background side decreases the accuracy rate and not having contributed to recognize expressions. Ekman defined six basic emotions which are claimed to be universally associated with distinct facial expressions. These six basic emotions are: happiness, sadness, surprise, fear, anger, and disgust.The Facial Action Coding System (FACS) is a human-observer-based system that has been developed to facilitate objective measurement of subtle changes in facial appearance caused by contractions of the facial muscles [1].Automatic facial expression systems can be applied to human-computer interaction, stress-monitoring systems, low-bandwidth videoconferencing, human behavior analysis, etc. [2-5].

Facial action coding is a muscle based approach. The action of face can be defined by action unit(AU). The expression of human changes many times it can be named by AUs.for ex-

AU1 for rising the outer eyebrow.AU2 for upper lips rising, AU3 for cross eye.

Input image	Required image after crop	Expression
		Happy face
		Sad face
		Surprise face

III. ALGORITHM FOR AUTOMATIC FACIAL EXPRESSION RECOGNITION

Before you begin to format your paper, first write and save the content as a separate text file. Keep your text and graphic files separate until after the text has been formatted and styled. Do not use hard tabs, and limit use of hard returns to only one return at the end of a paragraph. Do not add any kind of pagination anywhere in the paper. Do not number text heads-the template will do that for you.

A. To detect the face

face detection is a first step of the algorithm, for the machine and any system it's not an easy task to detect the face. Automatic human face detection by computers is a very challenging task because face patterns can have significantly variable image appearances. For example, human faces vary from genders, ages, hairstyles and races etc. Several different approaches have been proposed to solve the problem of face detection [6-8]. Each approach has its own advantages and disadvantages.

B. *Tracking feature points*

After the detection of face next step is to extract the essential features from the faces.in human faces there are some points that determines the emotions or expressions of face.

When facial muscles contract, the transformation of the corresponding skin areas attached to the muscles Produces changes in the appearance of facial features and results in a certain type of visual effect. The movements of facial points (eyebrows, eyes, and mouth) have a strong relation to the information about the shown facial expression. We use these area for recognize facial expression. Use three rectangles for point these area in face. To alleviate unnecessary computational load we decided to compute optical flow within three rectangles which include the action units having high Proceedings of the correlations with facial expressions.

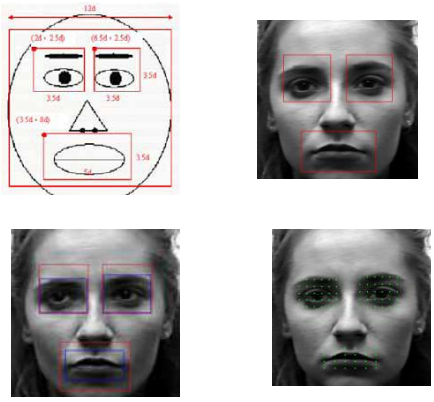

The geometrical face represented by 1st image, 2nd image represents three rectangles on the face, 3rd image represent the refined rectangles on the face, uniformly distributed point represented on the images. These three rectangles are consisted of the upper left rectangle enclosing the left eye and the brow, the upper right rectangle enclosing the right eye and the Brow, and the lower middle rectangle enclosing the mouth since these three regions have high correlations with facial expressions. We built a geometric face model as shown to represent the geometrical relations of those three regions. Based on the face model, three initial rectangles as shown in Fig. can be quickly located from the face detected by the previous step.

Some tracking results of distributing points on the face. A pyramidal implementation of a hierarchical optical flow method is used to automatically track thefeature points in the image sequence. The displacement of each feature point is calculated by subtracting its original position in the first frame from the final position in the last frame of the image sequence. Since the size of the face varies from person to person, the computed displacements are normalized by dividing the displacements by the face width. The flow vectors are used as an input pattern to neural networks for the recognition of action units. Figure illustrates some examples with optical flow vectors superimposed on the faces.

C. *Facial expression recognition*

To recognize facial expression direct approach on full face should not be used on face. There should be partition according to the action unit of face, following this multilayer perceptron used for recognize to action unit in the eye brows, eys and mouth region by the neural network perceptron of first layer passed to the second layer, each AU represent the action of face, by the trained MLP the system can recognize many expression of the face.

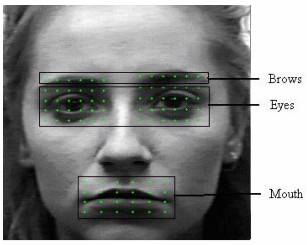

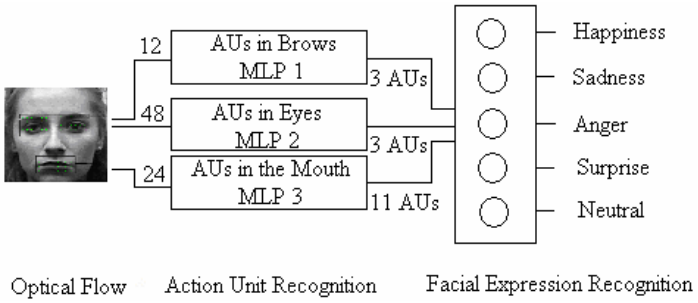

The 6 prototypic expressions relate to the emotional states of happiness, sadness, surprise, anger, fear, and disgust [9]. However, it has been noted that the variation in complexity and meaning of expressions covers far more than these six expression categories [10]. Moreover, although many experimental expression recognition systems use prototypic expressions as output categories, such expressions occur infrequently, and fine changes in one or a few discrete face parts communicate emotions and intentions. An AU is one of 46 atomic elements of visible facial movement or its associated deformation; an expression typically results from the agglomeration of several AUs . AUs are described in the Facial Action Coding System (FACS).

Challenges: A key challenge is achieving optimal preprocessing, feature extraction or selection, and classification, particularly under conditions of input data variability. To attain successful recognition performance, most current expression recognition approaches require some control over the imaging conditions. The controlled imaging conditions typically cover the following aspects.

View or pose of the head.

Environment clutter and illumination.

Miscellaneous sources of facial variability: Facial characteristics display a high degree of variability due to a number of factors, such as: differences across people (arising from age, illness, gender, or race, for example), growth or shaving of beards or facial hair, make-up, blending of several expressions, and superposition of speech-related (articulatory) facial deformation onto affective deformation.

IV. CONCLUSIONS

In this paper, a simple approach to automatic facial expression recognition is presented. The proposed system is able to automatically performhuman face detection, feature point extractionand facial expression recognition from imagesequences. The extraction of facial features sometimes is a very challenging task. To alleviate the computational load, we propose to uniformly distributefeature points over the three automatically located rectangles instead of extracting precise facial features. The average recognition performance for facial expressions could be achieved to 93% correct. This result was very encouraging compared to some existing approaches.

REFERENCES

[1] P. Ekman and W.V. Friesen, Facial Action Coding System(FACS), Consulting Psychologists Press, 1978.

[2] G. W. Cottrell and J. Metcalfe, “EMPATH: Face, gender, and emotion recognition using holons,”Advances in Neural Information Processing Systems, vol. 3, pp. 564-571, 1991

[3] T. Darrel, I. Essa, and A. P. Pentland, “Correlation and interpolation networks for real-time expression analysis/synthesis,”Advances in Neural Information ProcessingSystems (NIPS) 7, MIT Press, 1995.

[4] I. A. Essa and A. Pentland, “A vision system for observing and extracting facial action parameters,” Proc. Computer Vision and PatternRecognition, pp. 76-83, 1994.

[5] K. Mase, “Recognition of facial expression from optical flow,” IEICE Trans., vol. E74, no. 10, pp. 3474-3483, 1991.

[6] K. Matsuno, C. Lee, and S. Tsuji, “Recognition of human facial expressions without feature extraction,” ECCV, pp. 513-520, 1994.

[7] D. Terzopoulos and K. Waters, “Analysis and Synthesisof facial image sequences using physical and anatomical models,” IEEE Trans.Pattern Anal. Machine Intell, vol. 15, pp.

[8] T. Vetter, Learning novels views to a single face image. Proceedings of the IEEE International Conference on Automatic Face and Gesture Recognition ‘95: 22-29, 1995

[9] W.V. Friesen, P. Ekman, and EMFACS-7: Emotional Facial Action Coding System, Unpublished manuscript, University of California at San Francisco, 1983.

[10] A. Pentland, B. Moghaddam, T. Starner, "View-based and Modular Eigenspaces for Face \ Recognition", Proc. IEEE Computer Soc. Conf. on Computer Vision and Pattern Recognition, pp. 84-91, 1994.